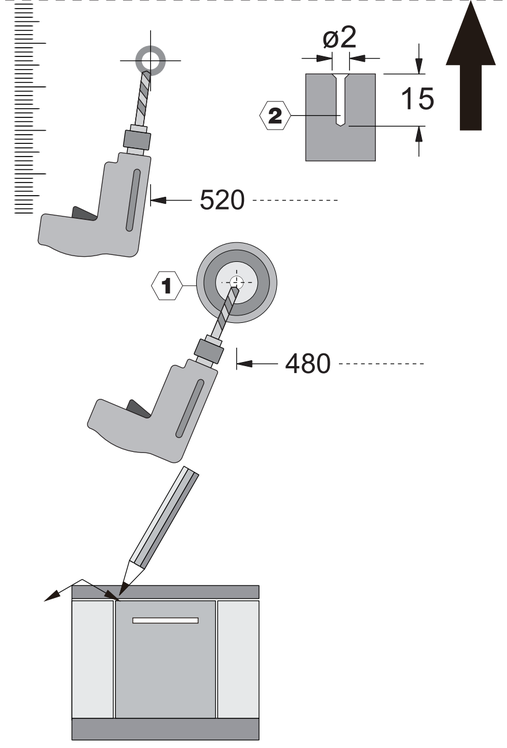


*Align the center line with the center line of the wooden door

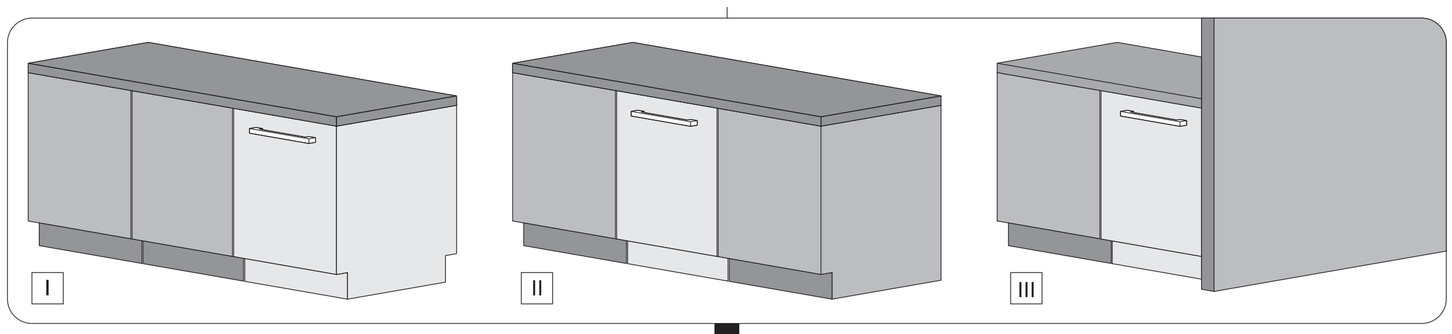


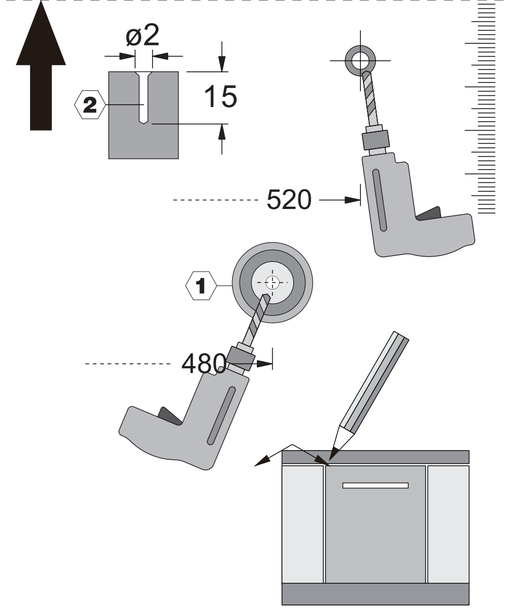

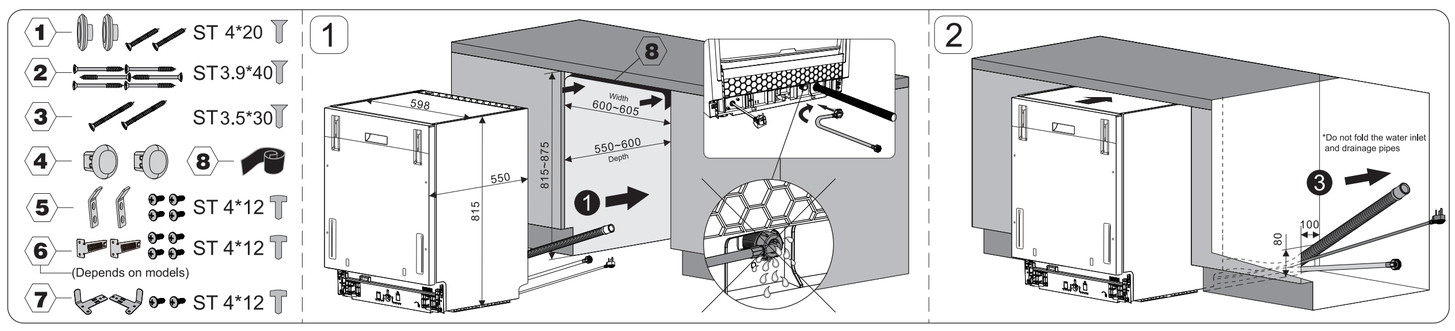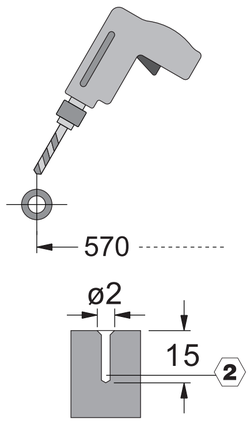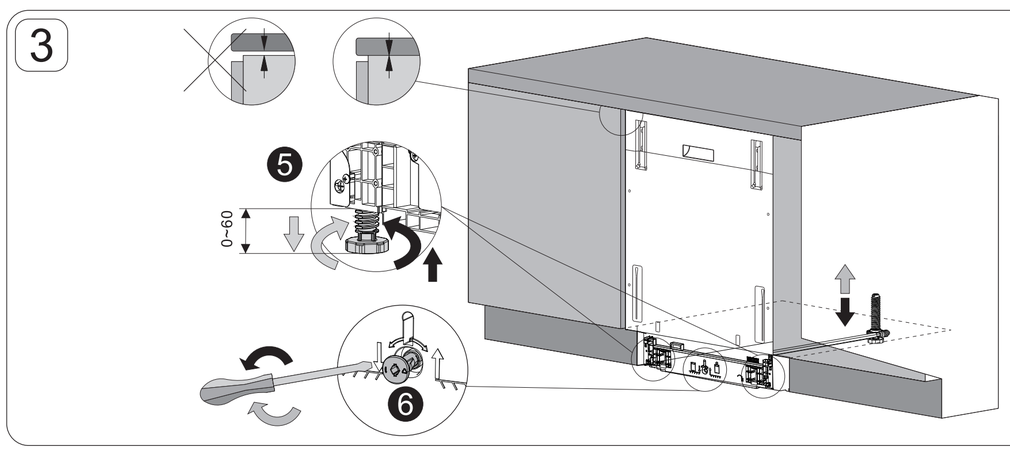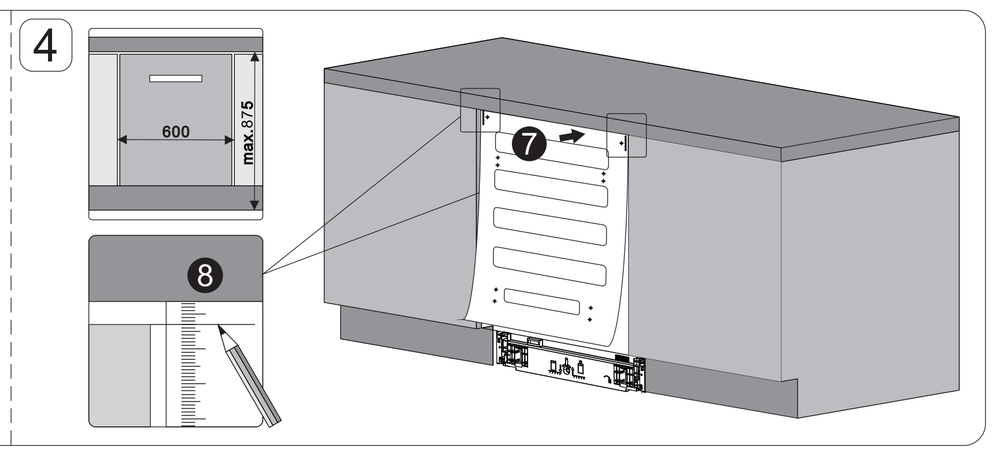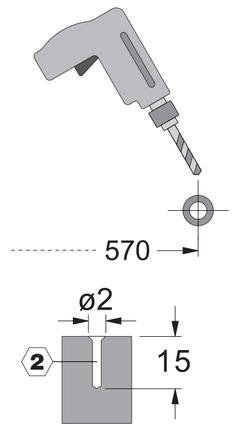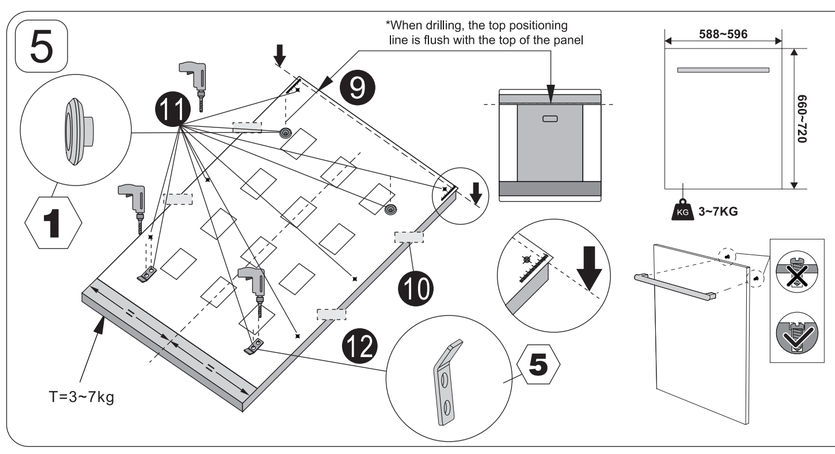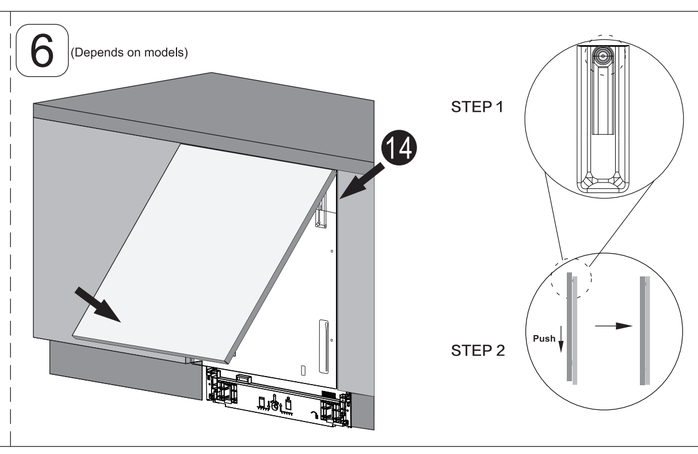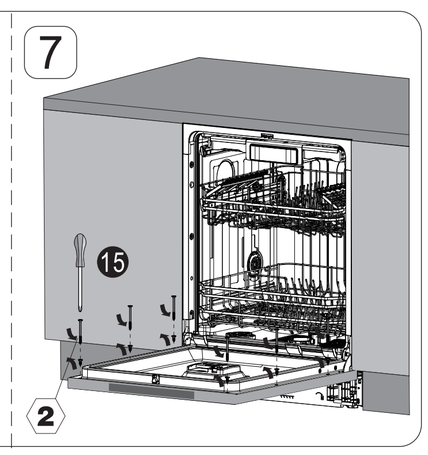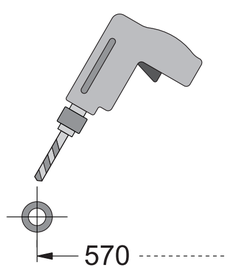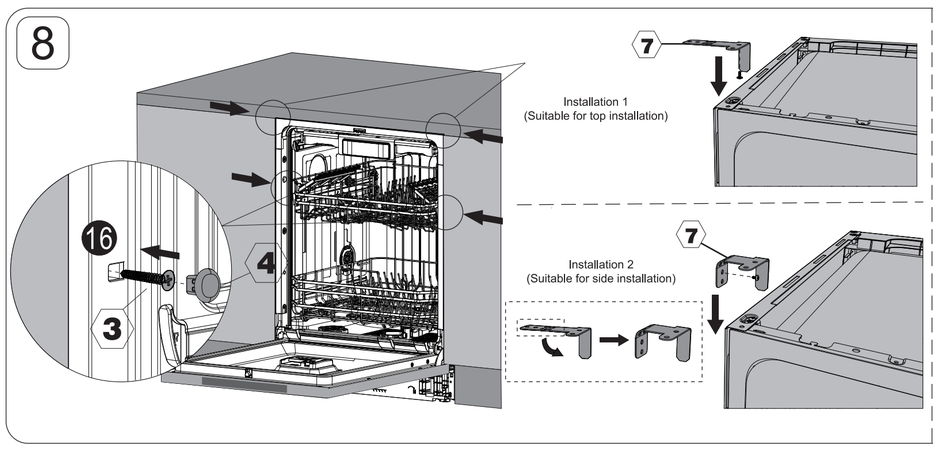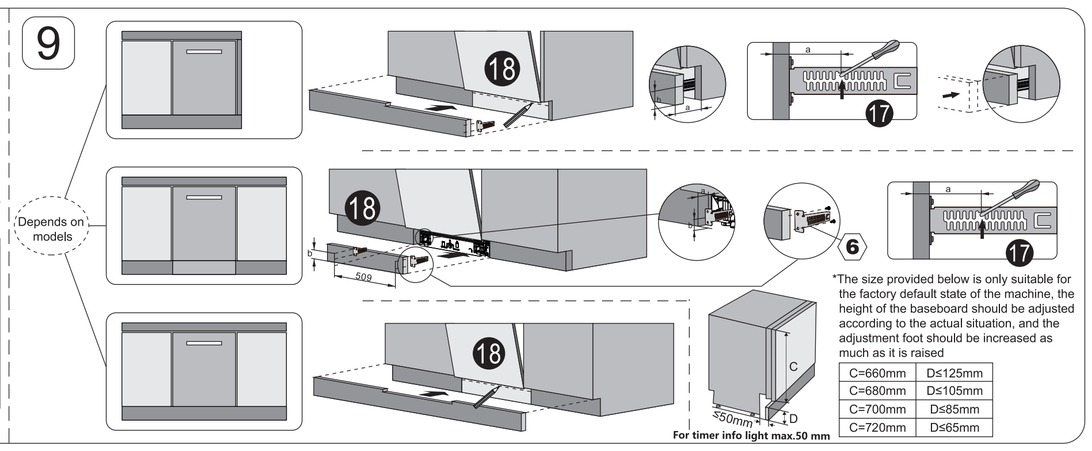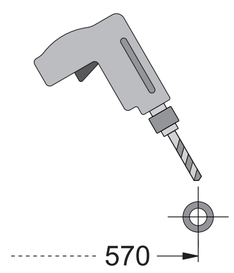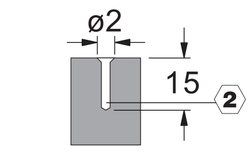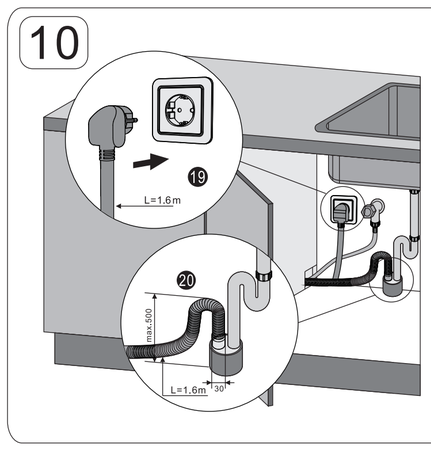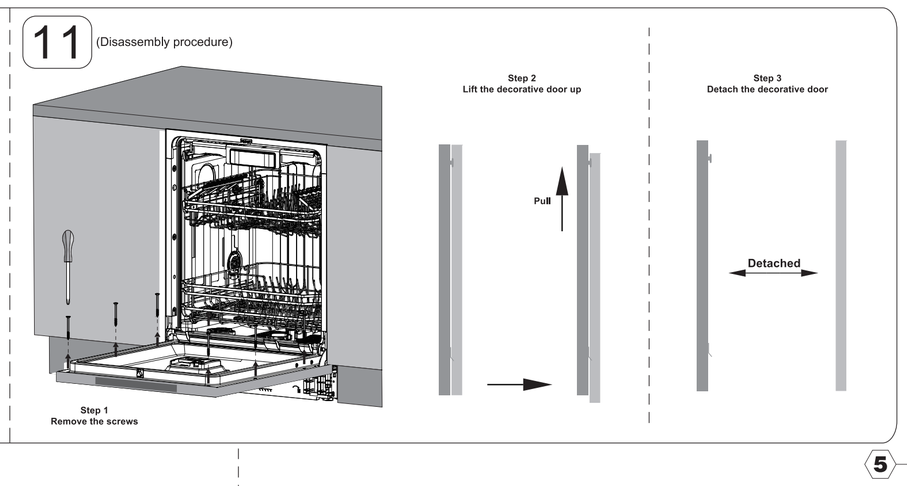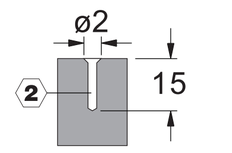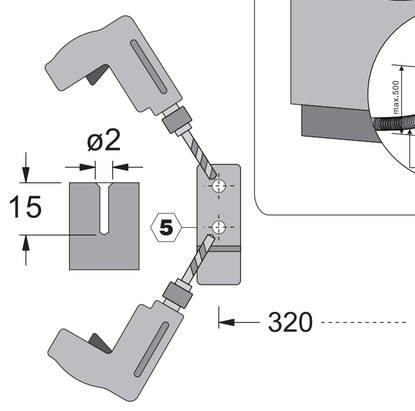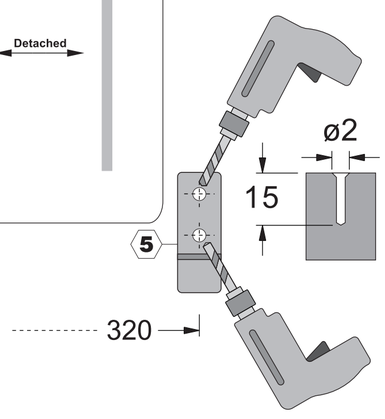
**Decorative door dimension**
**Fixed type:Height 660~720mm Width 588~596mm Thickness 20mm**